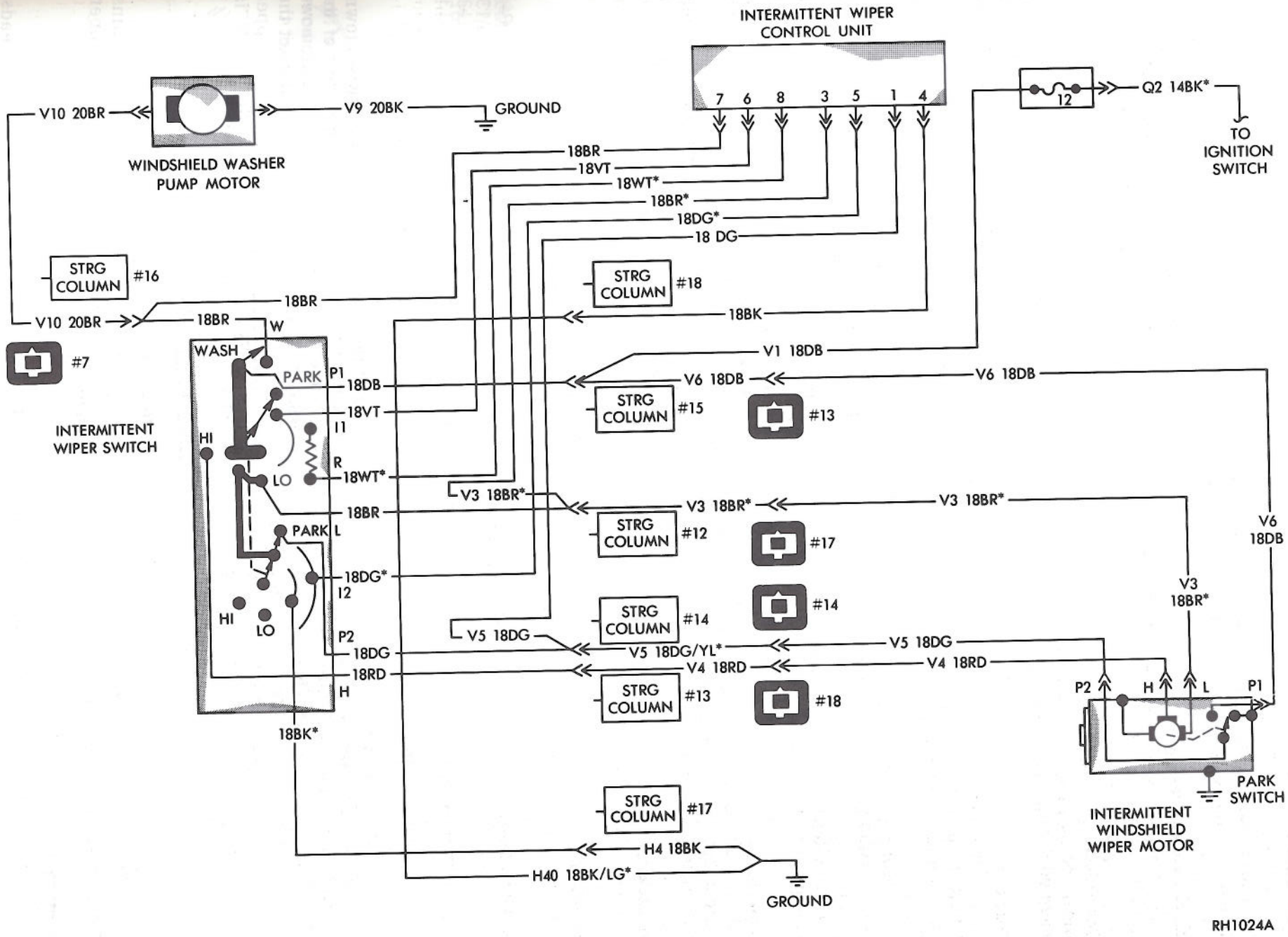

Fig. 7—Intermittent Wipe Wiring Schematic