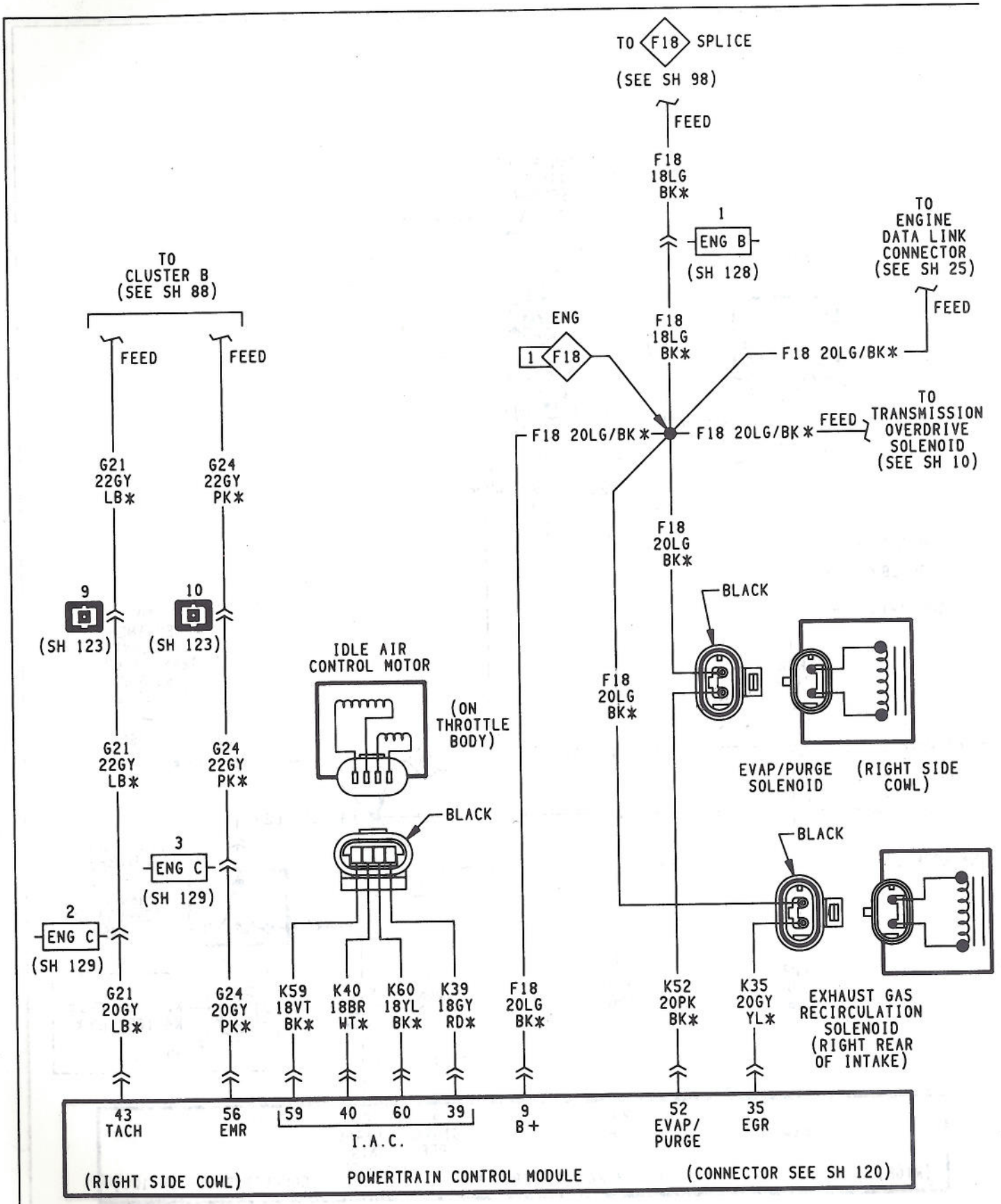

FUEL INJECTION IGNITION SYSTEM
(5.2L AND 5.9L ENGINES)

BR 29

J948W-9